Current part is item (19) on diagram. Available at www.oshkoshequipment.com

SECTION II. REPAIR PARTS FOR ORGANIZATIONAL, INTERMEDIATE (FIELD) (DIRECT AND GENERAL SUPPORT) AND DEPOT MAINTENANCE

(1) ILLUSTRATION a FIG NO.	(1) ILLUSTRATION b ITEM NO.	(2) SMR CODE a ARMY	(2) SMR CODE b AIR FORCE	(2) SMR CODE c NAVY	(2) SMR CODE d USMC	(3) USMC a SSI	(3) USMC b REPL FACTOR	(4) NATIONAL STOCK NUMBER	(5) DESCRIPTION REF NUMBER & MFR CODE	(5) DESCRIPTION USABLE ON CODE	(6) U/M	(7) QTY INC IN UNIT	(8) USMC QTY PER EQUIP
									GROUP 05 - FUEL SYSTEM				
34									FUEL FILTER AND PUMP ASSEMBLY AND RELATED PARTS				
34	1	AOO	AOO	AFF	AFF				FUEL FILTER AND PUMP ASSY 71-4471	 30554	EA	1	1
34	2	PAOZZ	PAOZZ	PAFZZ	PAFZZ	D	.006	5310-00-245-3419	ELBOW MS20822-6	 96906	EA	1	3
34	3	PAOZZ	PAOZZ	PAFZZ	PAFZZ		.030	4810-00-216-1849	VALVE, SOLENOID 69-787-2 V5L8720 6x322	 30554 81978 73212	EA	1	1
34	4	PAOZZ	PAOZZ	PAFZZ	PAFZZ	D	.008	4730-00-188-3513	PLUG, SQUARE HEAD MS20913-2	 96906	EA	1	3
34	5	PAOZZ	PAOZZ	PAFZZ	PAFZZ	D	.006	4730-00-177-6166	TEE, STREET 71-4853 1-4MROS	 30554 30780	EA	1	2
34	6	PAOZZ	PAOZZ	PAFZZ	PAFZZ	D	.006	4730-00-186-7798	NIPPLE AN911-2	 88044	EA	1	1
34	7	AFO	AFO	AFO	AFO			4720-00-802-8008	HOSE ASSY MS28741-6-0140	 96906	EA	2	2
34	8	PAFZZ	PAFZZ	PAFZZ	PAFZZ	D	.006	4730-00-843-0269	FITTING MS24587-6	 96906	EA	2	12
34	9	PAFZZ	PAFZZ	PAFZZ	PAFZZ	D	.070	4720-00-278-1323	HOSE MIL-H-8794-6	 81349	FT	2	2
34	10	PAOZZ	PAOZZ	PAOZZ	PAOZZ	D	.006	4730-00-209-5015	ELBOW 71-4842-05 6CDCTX-S	 30554 08752	EA	1	1
34	11	PAOZZ	PAOZZ	PAOZZ	PAOZZ	D	.006	4730-00-289-2378	ELBOW 71-4855 6DXS	 30554 08752	EA	1	1
34	12	PAOZZ	PAOZZ	PAOZZ	PAOZZ	D	.006	4730-00-202-9997	CONNECTOR 71-4840 6GTXS MS51503A6	 30554 08752 30327	EA	2	3
34	13	PAOZZ	PAOZZ	PAOZZ	PAOZZ	D	.006	4730-00-995-1559	CONNECTOR MS51500A6	 96096	EA	1	2
34	14	PAOZZ	PAOZZ	PAOZZ	PAOZZ	D	.006	4730-00-231-5622	ELBOW AN916-2	 88044	EA	1	1
34	15	PAOZZ	PAOZZ	PAOZZ	PAOZZ	D	.008	5305-00-068-0502	SCREW, HEX HEAD MS90725-6	 96906	EA	4	118
34	16	PAOZZ	PAOZZ	PAOZZ	PAOZZ	D	.010	5310-00-809-4058	WASHER, FLAT MS27183-10	 96906	EA	4	252
34	17	PAOZZ	PAOZZ	PAOZZ	PAOZZ	D	.008	5310-00-483-8792	NUT MS17829-4C	 96906	EA	4	167
34	18	PAOZZ	PAOZZ	PAOZZ	PAOZZ	D	.010	5310-00-869-2528	WASHER, LOCK MS45904-6B	 96906	EA	2	6
34	19	PAOOO	PAOOO	PAOOO	PAOOO		.013	2910-01-095-7595	PUMP, ELECTRIC, FUEL 72-5313 480517	 30554 72850	EA	2	2
34	20	PAFZZ	PAFZZ	PAFZZ	PAFZZ			2910-01-063-3144	COVER 479130	 72850	EA	1	2
34	21	PAOZZ	PAOZZ	PAOZZ	PAOZZ		.030	5330-00-763-9322	GASKET, COVER 479136	 72850	EA	1	2
34	22	PAOBZ	PAOBZ	PAOZZ	PAOZZ			2910-00-893-6402	STRAINER 479729	 72850	EA	1	2

Current part is item (19) on diagram. Available at www.oshkoshequipment.com

Current part is item (19) on diagram. Available at www.oshkoshequipment.com

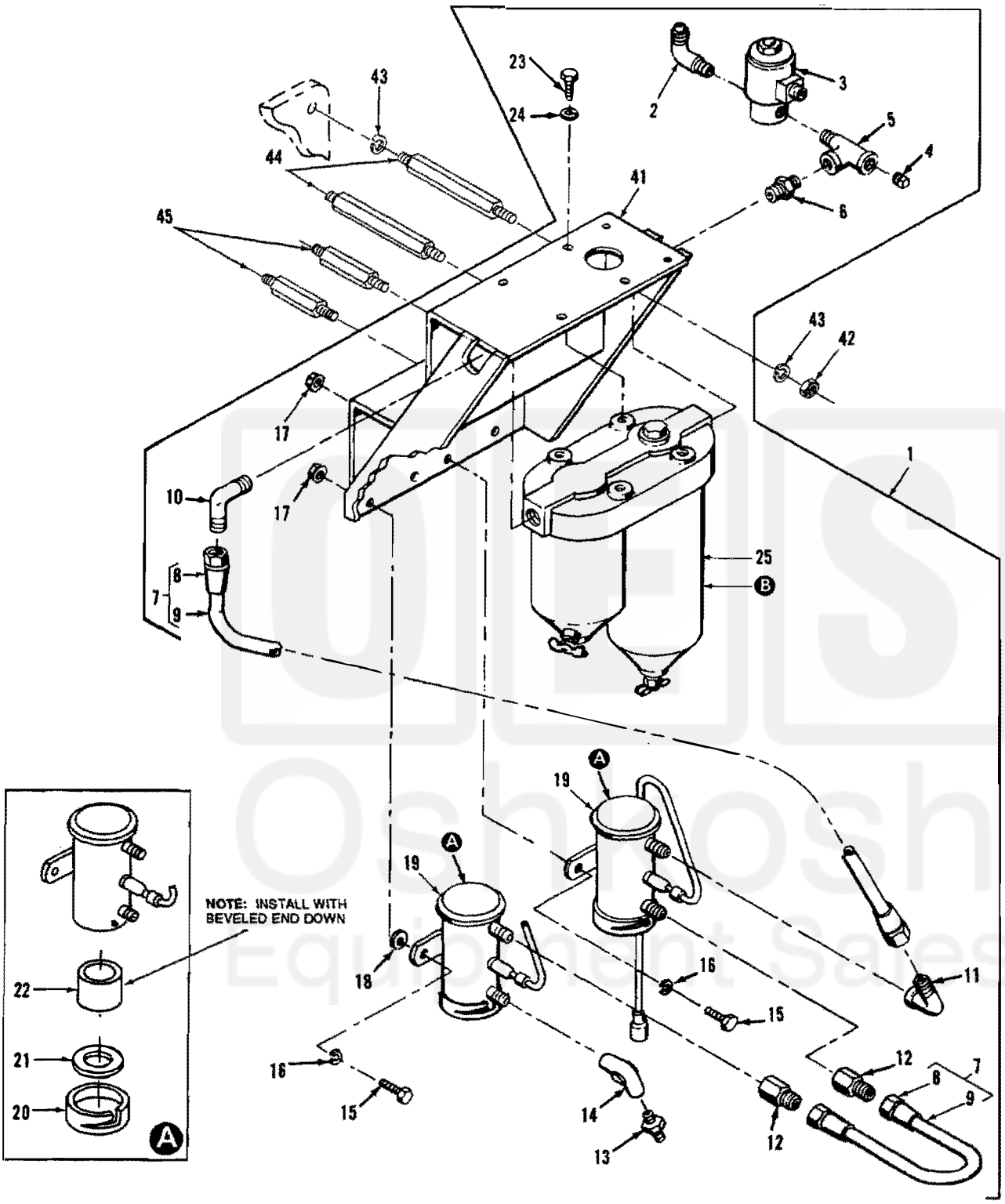

Figure 34. Fuel Filter and Pump Assembly and Related Parts
(Sheet 1 of 2)

Current part is item (19) on diagram. Available at www.oshkoshequipment.com